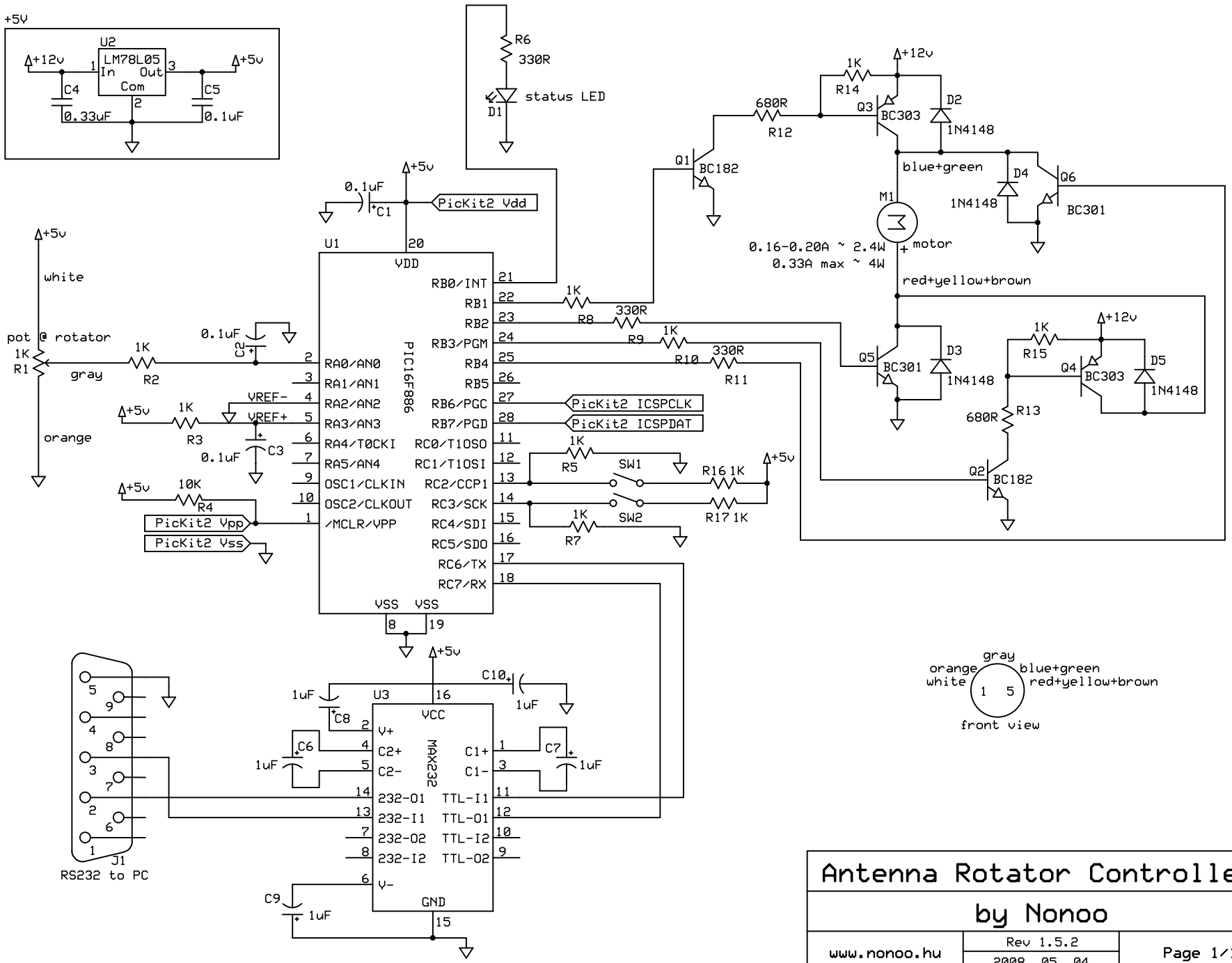

Antenna Rotator Controller

by Nonoo

www.nonoo.hu	Rev 1.5.2 2008. 05. 04.	Page 1/1